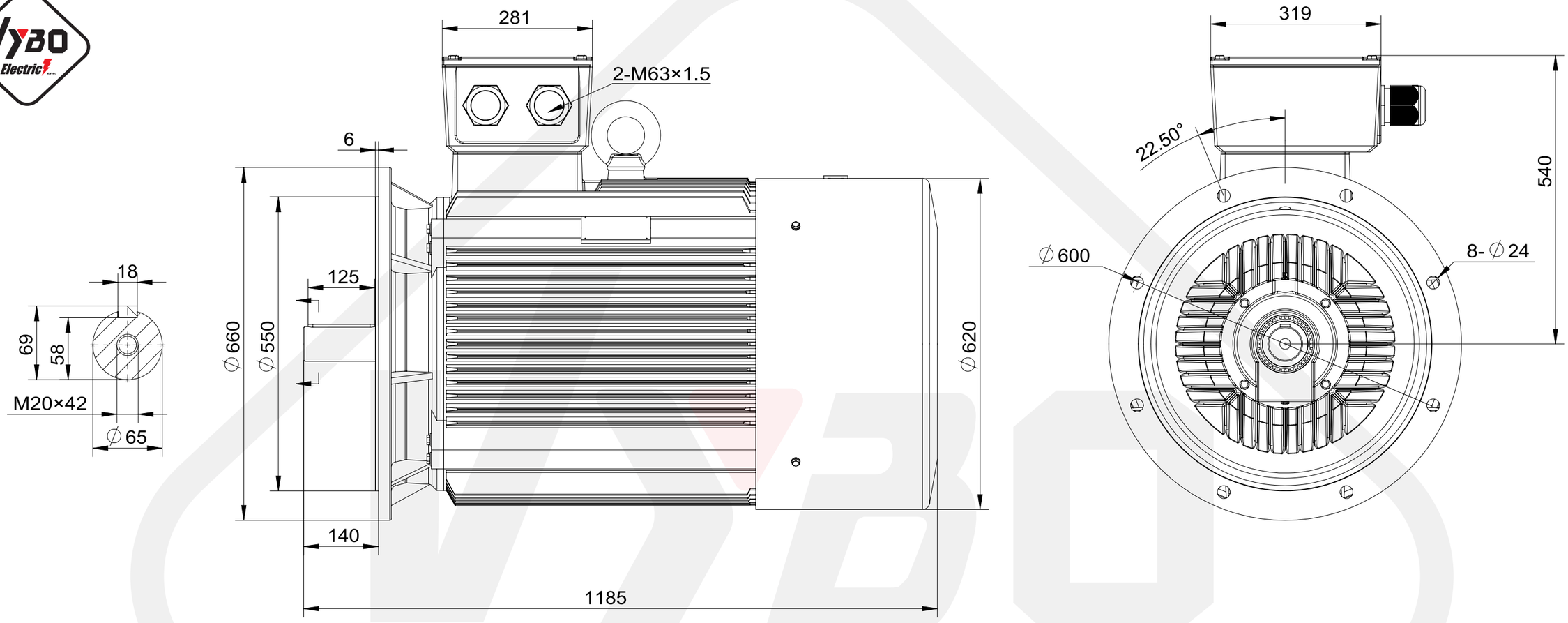

1LC-315S-2P-B5
Mounting diagram